Farécla | TOOLS & EQUIPMENT

G·PLUS

CORDLESS ROTARY POLISHING MACHINE.

PRODUCT DESCRIPTION

The G Plus Cordless Rotary Polishing Machine has been developed to Farécla's own specifications.

The soft start motor helps reduce product splash while the speed stabilisation offers the operator a constant speed output. The ergonomically engineered handle fits snugly into the grip of the operator and it is an exceptionally well-balanced machine that minimises vibration and the associated user fatigue.

The polishing machine is very lightweight, and provides cool running for large polishing jobs.

The thumb-operated speed dial gives variable speed control from 700 – 1800 rpm.

Typical run time 45 mins (for 150 mm / 6" pads) and charge time from empty 1 hour.

PRODUCT INFORMATION

PRODUCTS	CODE	QTY.
G Plus Cordless Rotary Polisher (tool only)	GPT050	1
ACCESSORIES		
G Plus 18V 5.0Ah Battery	GPT150	1
G Plus Twin Bay Charger	GPT151	1

Comes with a free G Mop Flexible Back Plate for 150 mm / 6" Range Pads

KEY BENEFITS

LIGHTWEIGHT	Only 1.8 kg, reducing muscle fatigue. Far lighter than many competitors.
700 – 1800 RPM	Good for almost all Farécla compounds (sole exception Profile 200)
BRUSHLESS MOTOR	No maintenance and longer battery life per charge
LOW VIBRATIONS	Main handle 2.37 m/s2. auxiliary handle 2.521 m/s2. This enables quiet running as well as comfortable handling
BACK PLATE INCLUDED	Free G Mop Flexible Back Plate (14 mm thread), ideal for use with the Farécla G Mop 150 mm / 6" applicator range

fareclaproductsltd

Farécla | SURFACE FINISHING SPECIALISTS

Farécla Products Ltd, Broadmeads, Ware, Hertfordshire, SG12 9HS, UK | TEL: +44(0)1920 465 041 | E-Mail: enquiries@farecla.com | www.Farecla.com

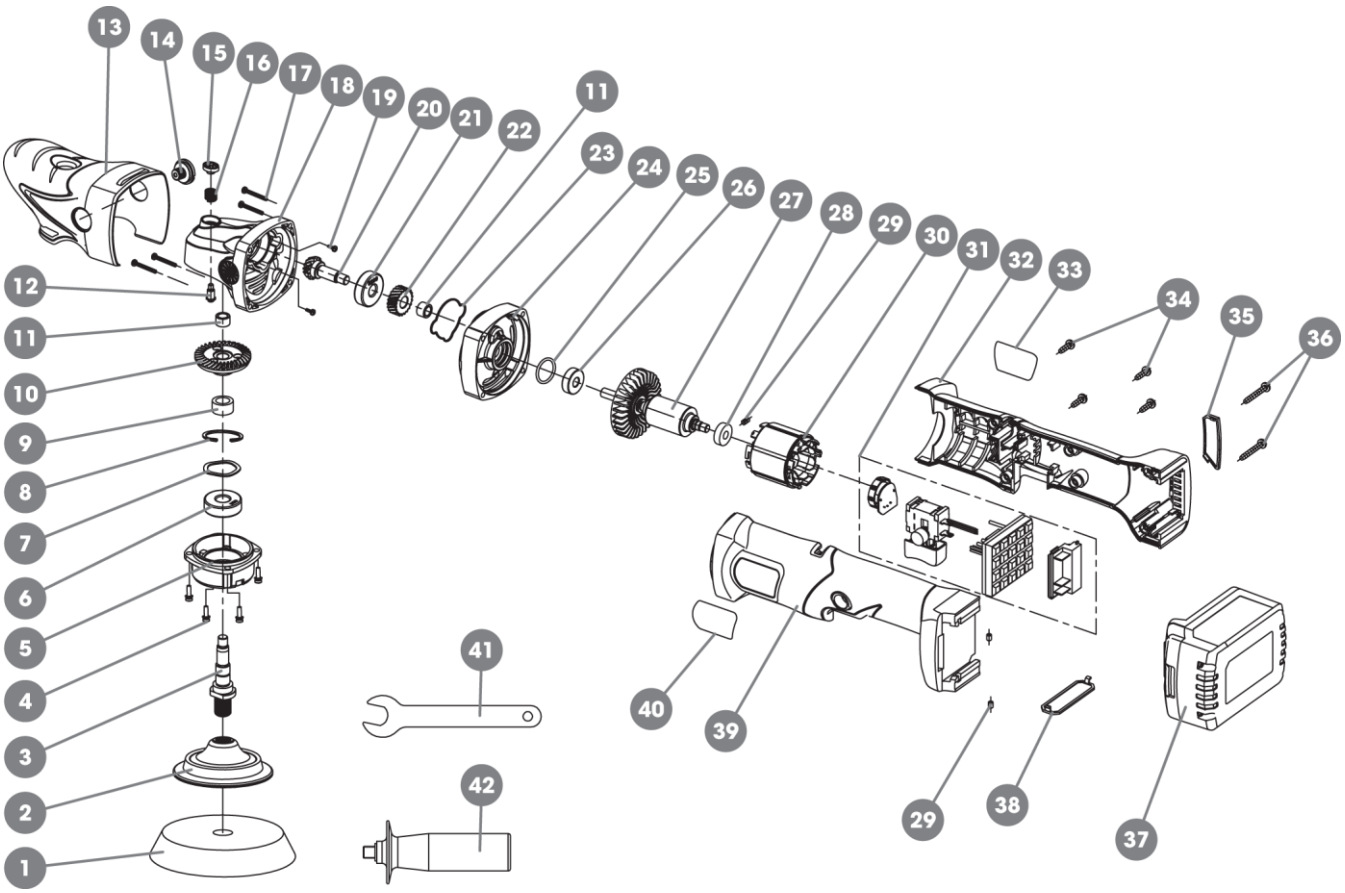

SPARE PARTS

No.	Part name	No.	Part name	No.	Part name
1	Applicator – GMC650 / GMC622 / GMF622	16	Pin spring	31	Controller assembly – GPT120
2	Back plate - GMB146	17	Screw ST4.2 x 40	32	Housing (right)
3	Output shaft	18	Gear case	33	Farécla label
4	Screw M4 x 14	19	Screw M4 x 8	34	Screw ST4.2 x 14
5	Gear case cover	20	Gear sha	35	Filter screen (R) – GPT103
6	Ball bearing 6201-2RS	21	Ball bearing 6200-2RS	36	Screw ST4.2 x 30
7	Wave spring washer 32	22	Bevel gear Z2	37	Battery – GPT150
8	Circlip for holes 32	23	Rubber seal ring	38	Filter screen (D) – GPT104
9	Gear washer	24	Bearing retainer	39	Housing (left)
10	Gear	25	O-Ring 21.2 x 1.8	40	Technical information label
11	Oil-impregnated bearing	26	Ball bearing 608-DW	41	Wrench 17
12	Spindle-lock pin	27	Armature – GPT132	42	Side handle
13	Plastic case cover	28	Ball bearing 607-2RZ		
14	Plastic screw M10 x 8	29	Rubber pin		
15	Lock pin cap	30	Field coil – GPT102		

Only use the charger and battery pack specified by Farécla. Read the operator's manual supplied with your charger and battery.

FUNCTIONAL DESCRIPTION

1. Front Grip
2. Spindle Lock Button
3. Side Handle Socket Cap
4. Backing Plate
5. Speed Control Dial
6. Trigger Lock Button
7. Switch Trigger
8. Battery
9. Battery Release Button
10. Vents (right side and underneath)

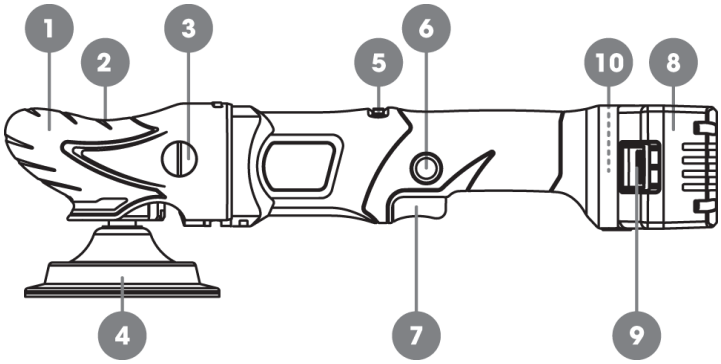

SPARE PARTS

PARTS	CODE	QTY.	PARTS	CODE	QTY.
Speed controller	**GPT162**	5	Armature	**GPT156**	1
Field coil	**GPT102**	1	Filter screen (R)	**GPT103**	100
Rubber ring	**GPT189**	10	Filter screen (D)	**GPT104**	100
Gear	**GPT186**	10	Guard	**GPT185**	1
Pinion	**GPT188**	20	Lock pin cap	**GPT187**	100

G PLUS RECHARGEABLE LI-ION BATTERY
18V (5.0Ah)
GPT150 (780727 **73702**)

G PLUS 18V TWIN BAY CHARGER
GPT151 (780727 **73704**)

- Charger supplied with UK and EU plug leads
- Recommended temperature range for machine use and battery charging: +4°C to +40°C
- Charger has twin cooling fans
- Battery and charger both have charge indicator lights

ALTERNATIVE G PLUS POLISHERS:	**CODES**
G Plus Electric Rotary Polishing Machine (with power cord) – UK 3-pin type G plug	**GPT003**
G Plus Electric Rotary Polishing Machine (with power cord) – EU 2-pin type C plug	**GPT002**
G Plus Electric Dual Action Polishing Machine (with power cord) – UK 3-pin type G plug	**GPT203**
G Plus Electric Dual Action Polishing Machine (with power cord) – EU 2-pin type C plug	**GPT202**
G Plus Cordless Dual Action Polishing Machine – Suitable for UK and EU	**GPT250**

Farécla | TOOLS & EQUIPMENT

G·PLUS

CORDLESS ROTARY POLISHING MACHINE.

SPECIFICATIONS	
Part number	**GPT050**
Backing plate for Ø150 mm / 6" pads	**GMB146** (780727**00148**)
Voltage	**18V DC**
Speed	**700 - 1800/min**
Output shaft	**M14**
Recommended ambient	**+4°C to +40°C**

MANUAL

WARNING

PLEASE READ CAREFULLY. Failure to follow these instructions may result in electric shock, fire and/or serious personal injury.

WORK AREA SAFETY

• Keep work area clean and well lit.
• Do not operate power tools in an atmosphere where a risk of explosion exists, such as in the presence of flammable liquids, gases or dust. Power tools create sparks which may ignite dust or fumes.
• Keep children and bystanders away while operating power tools. Distractions can be dangerous.

ELECTRICAL SAFETY

• Do not expose power tools to rain or wet conditions. Water entering a power tool will increase the risk of electric shock.

PERSONAL SAFETY

• Stay alert, watch what you are doing and use common sense when operating a power tool. Do not use a power tool while you are tired or under the influence of drugs, alcohol or medication as this could result in serious personal injury.
• Use appropriate personal protection equipment, such as a face mask and gloves.
• Remove any adjusting key or wrench before turning the power tool on. A wrench or a key left attached to a rotating part of the power tool may result in personal injury.
• Do not overreach. Keep proper footing and balance at all times. This enables better control of the power tool in unexpected situations.
• Do not wear loose clothing or jewellery. Keep hair and clothing away from moving parts.

POWER TOOL USE AND CARE

• Always follow the recommended speed settings for the compound or polish that you are using. Do not apply pressure to the polisher, let the machine action, compound and applicator work together to deliver the results. For optimal results, Farécla recommends using a rotary polisher for fast cutting results and a Dual Action polisher for a flawless finish.
• Do not use the power tool if the switch does not turn it on and off. Any power tool that cannot be controlled with the switch is dangerous and must be repaired.
• Disconnect the battery pack from the polisher before removing the backing plate, or storing your polisher. Preventive safety measures reduce the risk of starting the power tool accidentally.
• Keep out of reach of children.
• Do not allow untrained users to operate this polisher. Power tools are dangerous in the hands of untrained users.
• Maintain your polisher and accessories. Check for misalignment or binding of moving parts, any broken parts and any other conditions that may affect your polisher's operation. Do not use a damaged polisher.
• Use your polisher and accessories in accordance with these instructions, taking into account the working conditions and the work to be performed. Use of the power tool for operations different from those intended could result in serious personal injury.
• Keep your polisher dry, clean and free from oil and grease to ensure safe handling and control.

AWP337

BATTERY TOOL USE AND CARE

• Only charge the battery with the Farécla battery charger. Using another charger may create a fire risk.
• Only use Farécla batteries with your Farécla polisher. Using other batteries may create a risk of injury and fire.
• When a battery pack is not in use, keep it away from other metal objects, especially small metal objects such as paper clips, coins, keys, nails, and that can make a connection from one terminal to another. Shorting the battery terminals together may cause burns or fire.
• If not used correctly, liquid may escape from a damaged battery. Avoid contact and if contact accidentally occurs, flush with water. If liquid contacts eyes, additionally seek medical help. Liquid ejected from the battery may cause irritation or burns.
• Do not use a battery pack or tool that is damaged or modified. Damaged or modified batteries may exhibit unpredictable behavior resulting in fire, explosion or risk of injury.
• Do not expose a battery pack or tool to fire or excessive temperatures. Exposure to fire or temperature above 130°C may cause explosion.
• Follow all charging instructions and do not charge the battery pack outside the temperature range specified in the instructions. Charging improperly or at temperatures outside the specified range may damage the battery and increase the risk of fire.

SERVICE

• Have your polisher serviced by a qualified repairer using only official replacement parts. This will ensure that the safety of your polisher is maintained.
• Do not attempt to repair damaged battery packs. Damaged battery packs should be disposed of in accordance with local Waste Electrical and Electronic Equipment directives.

GENERAL SAFETY INSTRUCTIONS

• This power tool is intended to function as a polisher. Read all safety warnings, instructions, illustrations and specifications provided with this polisher. Failure to follow all instructions listed below may result in electric shock, fire and/or serious injury.
• Operations such as grinding, sanding, wire brushing or cutting are not recommended to be performed with this polisher. Operations for which this polisher was not designed may create a hazard and cause personal injury.
• Only use Farécla accessories recommended for use with this Rotary polisher.
• Do not use applicator pads with an overall diameter in excess of 150 mm (6”)
• Only use the Farécla backing plate for rotary polishers (**GMB146** - SGA780727**00148**) with this machine.
• Do not use damaged accessories (backing plates and applicator pads). Before each use, inspect accessories for cracks, or excessive wear and tear. If your polisher or accessories are dropped, inspect them for damage and install replacement accessories, as required. After inspecting and installing an accessory, position yourself and bystanders away from the plane of the rotating accessory and run the power tool at maximum no-load speed for one minute. Damaged accessories will normally break apart during this test time.
• Never put your polisher down until it has come to a complete stop.
• Do not run your polisher while carrying it at your side.
• Regularly inspect and clean your polisher’s air vents. The motor's fan will draw dust into the housing and excessive accumulation of debris may be hazardous to your polisher.

Kickback and Related Warnings

Kickback is a sudden reaction to a pinched or snagged rotating pad, brush or any other accessory. Pinching or snagging causes rapid stalling of the rotating accessory which in turn causes the uncontrolled power tool to be forced in the direction opposite to the accessory's rotation at the point of the binding.
For example, if a foam pad is snagged or pinched by the work surface, the pad may either jump toward or away from the operator, depending on direction of the back plate's movement at the point of pinching. Pads may also break under these conditions. Kickback is the result of power tool misuse and/or incorrect operating procedures or conditions and can be avoided by taking proper precautions as given below.
• Use care when working near corners, sharp edges etc. Avoid bouncing and snagging the applicator pad.

ADDITIONAL SAFETY WARNINGS

WARNING! To reduce the risk of injury, when working in dusty conditions, wear appropriate respiratory protection or use a dust extraction solution.
• Maintain labels and nameplates. These carry important information. If illegible or missing, please contact Farécla for assistance.

INTENDED USE

This polisher is designed for industrial and automotive surface polishing tasks.
Recommended Polishing Pads: Farécla pads suitable for rotary polishers (e.g. **GMC650** Super High Cut Pad, **GMC622** Angled Compounding Foam and **GMF622** Angled Finishing Foam)
Recommended Battery: GPT150 (780727**73702**) 18V (5.0 Ah)
Recommended Charger: GPT151 (780727**73704**)

AWP337

WARNING

Only use the charger and battery pack specified by FARECLA. Read the operator's manual supplied with your charger and battery.

FUNCTIONAL DESCRIPTION

1. Front Grip
2. Spindle Lock Button
3. Side Handle Socket Cap
4. Backing Plate
5. Speed Control Dial
6. Trigger Lock Button
7. Switch Trigger
8. Battery
9. Battery Release Button
10. Vents (right side and underneath)

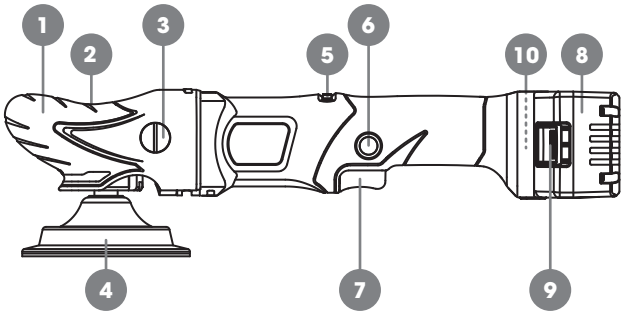

SYMBOLOGY

Before operating your polisher, read the manual

There is a risk of electric shock if not used correctly

Do not expose batteries to fire as there is a risk of explosion

Do not expose your polisher to rain or other liquids, keep it dry at all times

Store your polisher and batteries inside

Only charge batteries at temperatures between 4°C and 40 °C. Protect the battery from excessive heat, and from continuous exposure to sunlight

Do not dispose of power tools or batteries in domestic waste. Power tools and batteries must be collected and recycled in accordance with the Waste Electrical and Electronic Equipment Directive, or regional equivalent regulations

ASSEMBLY

Removing/Inserting the Battery

To remove the battery, push in the release button and pull the battery pack away from the tool.

WARNING! Always remove the battery pack before changing or removing accessories.

To insert the battery, slide the pack into the body of the tool. Make sure it latches securely into place.

Installing Side Handle

The side handle may be installed on either side of the polisher head. Position the side handle in the location which offers best control. To install, remove the cap of handle socket, insert the side handle into the thread and tighten securely.

Installing/Removing/Cleaning the Dust Screen

Proper maintenance of the dust screens will maintain the performance and extend the life of the tool.

CAUTION! Do not use your polisher without the dust screens installed.

1. To remove the dust screen, insert a flat screwdriver into the notch at the top of the dust screen and prise away from the tool
2. To clean the dust screen, tap against a hard surface, or blow clean with compressed air
3. To re-attach the dust screen, snap the screen back into the hole it came from (screen specific)

OPERATION

Fitting the backing plate and using applicators

1. Prior to attaching the backing plate, remove the battery pack and lay the tool on a flat surface with the spindle facing upwards
2. The Spindle Lock button can be pressed to aid in the fitting of, or removal of, the backing plate. N.B. NEVER PRESS THE SPINDLE LOCK BUTTON WHEN THE BATTERY IS ATTACHED. RUNNING YOUR POLISHER WITH THE SPINDLE LOCK BUTTON PRESSED WILL DAMAGE YOUR MACHINE AND INVALIDATE YOUR WARRANTY
3. Attach the Farécla backing plate (GMB146) onto the spindle.
4. Secure the backing plate tightly to the spindle
5. Press the applicator pad securely and centrally onto the backing pad. Use a centering tool, if preferred, to ensure the pad is optimally aligned for balance

AWP337

Starting, Stopping and Controlling Speed

Generally, lower speeds are recommended for tight work areas and higher speeds are ideal for large surface areas. Use the speed control dial and rpm guide – see sticker on side of tool - to set the maximum speed for the application.

1. Set the speed control dial to the desired maximum speed, then pull the trigger
3. Polisher speed can range from zero to the maximum selected setting by varying the pressure on the trigger
4. The trigger lock can be used to set your polisher at the maximum selected speed setting, if desired
5. To stop your polisher in normal use, release the trigger
6. To stop your polisher when the trigger lock is engaged, press and release the trigger

Polishing: Always use Farécla polishes and compounds and follow the instructions indicated on the packaging

MAINTENANCE

WARNING! To reduce the risk of injury, always unplug the charger and remove the battery pack from the charger or tool before performing any maintenance. Never disassemble the tool, battery pack or charger. Contact Farécla, or a Farécla-appointed service facility for all servicing and repairs.

Polisher Maintenance

Keep your polisher, battery pack and charger in good repair by adopting a regular maintenance programme. Regularly inspect your polisher to ensure it is free from damage and clean (including filter screens). If your polisher does not start or operate at full power with a fully-charged battery pack, clean the contacts on the battery pack. If the tool still does not work properly, contact Farécla or a Farécla-appointed service facility.

Cleaning

- Clean out dust and debris from the polisher vents and electrical contacts by blowing with compressed air.
- Remove dirt and dust from the housing with a paint brush or dry cloth, keeping away from all electrical contacts.
- Never use flammable or combustible solvents around batteries, chargers, or polishers
- Never immerse your polisher, battery or charger in liquid or allow liquids to enter the housing of any items.

Repairs: For repairs, contact Farécla or a Farécla-appointed service facility.

ACCESSORIES

WARNING! Use only genuine Farécla accessories. For a complete listing of accessories, please contact your local Farécla distributor, or visit https://www.farecla.com/g-plus

EXEMPTION FROM LIABILITY

Farécla Products Ltd is not liable for any damage and lost profit due to interruption in business caused by the product or by an unusable product. Farécla Products Ltd is not liable for any damage caused by improper use of tools or by use of your tool with other manufacturers' products.

UKCA DECLARATION OF CONFORMITY

We declare under our sole responsibility that the product described under "Technical Data" conforms to the following standards or normative documents:

EN60745-1, EN60745-2-3, EN55014-1, EN55014-2
2006/42/EC, 2014/30/EU

James Lambert
Procurement & Product Director
September 29th 2022

Authorised Distributor
Farécla Products Ltd, Broadmeads, Ware
Hertfordshire, SG12 9HS, UK
enquiries@farecla.com
www.farecla.com | +44 (0)1920 465 041

Warranty

To register your polisher, please visit: https://www.farecla.com/warranty

Exemptions to warranty:

- Damage caused by external effects or foreign objects, e.g. sand or stones
- Damage caused by misuse, abuse, accident, impact, improper storage and/or exposure to the elements, or neglect
- Damage caused by overloading the machine, use of non-permitted, defective or incorrectly used accessories
- Damage caused by not using electrical supply of the recommended voltage
- Not observing recommended maintenance practices, e.g. ensuring air vents are kept clean of any obstruction
- Partly or completely dismantled machines
- Wear & tear

For repairs and warranty claims, please visit
https://www.farecla.com/polishing-machine-warranty-claim-form

G PLUS CORDLESS POLISHER RANGE

G Plus Cordless Rotary Polishing Machine **GPT050** (780727**73698**)
G Plus Cordless Dual Action Polishing Machine **GPT250** (780727**73707**)
G Plus Rechargeable Li-Ion Battery **GPT150** (780727**73702**)
G Plus 18V Twin Bay Battery Charger **GPT151** (780727**73704**)

AWP337